C40.85.20O
Wheels
Polyurethane wheel

EAN 4021885030964



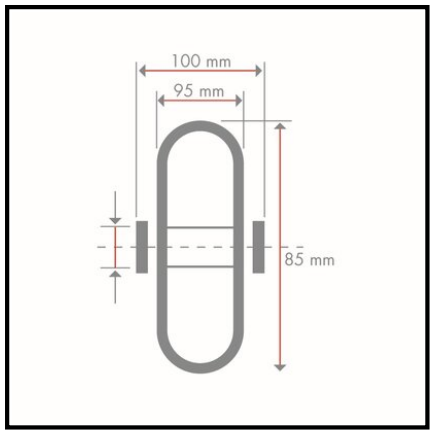

Technical data

Wheel Ø	85 mm
Load capacity	1000 kg
Tread	Cast polyurethane 95 +/- 3 Shore A
Bearing	Ball bearing
Wheel width	100 mm
Hub length	100 mm
Wheel body	Steel
Ball bearing type	6204-Z
Ø axle hole / bore	20 mm
Packaging quantity	1

Rolling resistance	●●●●●
Wear resistance	●●●●●
Floor preservation	●●

Copyright 10.03.2026 **BS Rollen GmbH** www.bs-rollen.com

Illustrations, drawings, dimensions etc. are subject to change and are therefore non-binding.