# L420.A85.082
# Swivel castors with total brake
# Transport castor

## EAN 4021885120733



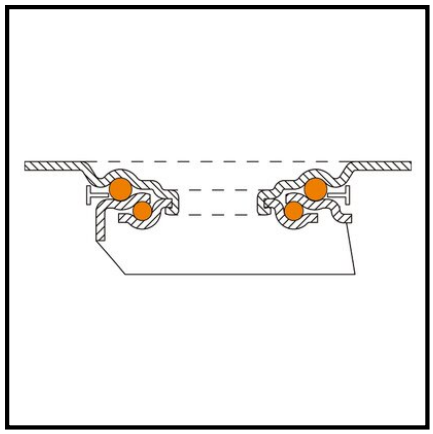

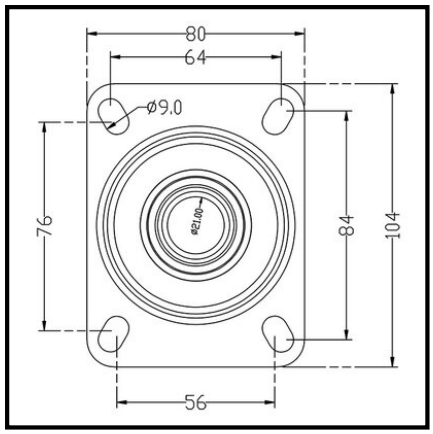


## Technical data

| | |
|---|---|
| **Wheel Ø** | 80 mm |
| **Load capacity** | 100 kg |
| **Tread** | Thermoplastic rubber grey |
| **Mounting height** | 105 mm |
| **Bearing** | Ball bearing |
| **Hole spacing distance** | 84x64/76x56 mm |
| **Plate size** | 104x80 mm |
| **Wheel width** | 32 mm |
| **Wheel body** | Plastic |
| **Offset** | 34 mm |
| **Screw hole Ø** | 9 mm |
| **Fastening** | Screw-on plate |
| **Packaging quantity** | 1 |

| | |
|---|---|
| **Rolling resistance** | ●●●●● |
| **Wear resistance** | ●●●● |
| **Floor preservation** | ●●● |

Copyright 10.03.2026 **BS Rollen GmbH** www.bs-rollen.com

Illustrations, drawings, dimensions etc. are subject to change and are therefore non-binding.