D16.400
Wheels
Polyurethane wheel (puncture-free)

EAN 4021885102876

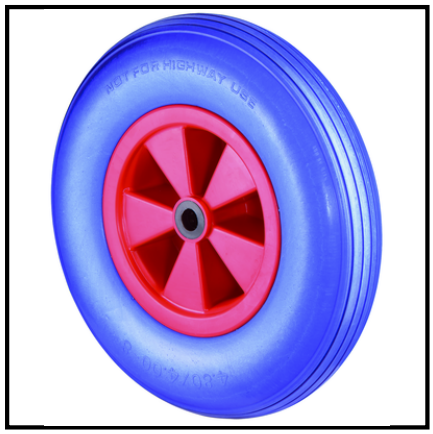

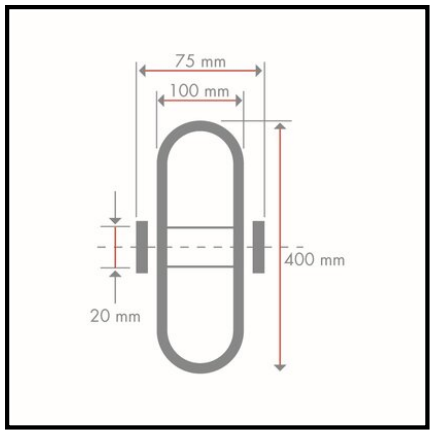

Technical data

Wheel Ø	400 mm
Load capacity	200 kg
Tread	Polyurethane blue
Bearing	Roller bearing
Wheel width	100 mm
Hub length	75 mm
Wheel body	Plastic
Ø axle hole / bore	20 mm
Profile	Groove profile
Remarks	S = studded profile, R = grooved profile
Packaging quantity	1

Rolling resistance	●●●●
Wear resistance	●●●●
Floor preservation	●●

Copyright 10.03.2026 **BS Rollen GmbH** www.bs-rollen.com

Illustrations, drawings, dimensions etc. are subject to change and are therefore non-binding.