LB500.B10.126
Swivel castors
Transport castor

EAN 4021885103491



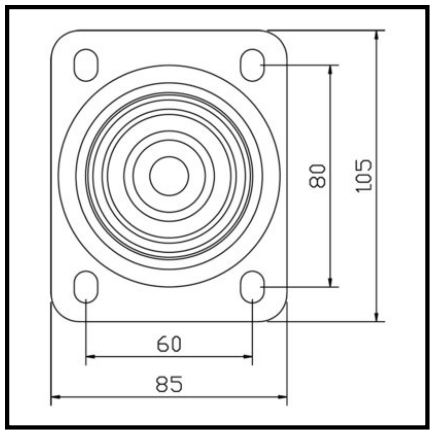

Technical data

Wheel Ø	125 mm
Load capacity	300 kg
Tread	Plastic
Mounting height	157 mm
Bearing	Roller bearing
Hole spacing distance	80x60 mm
Plate size	105x85 mm
Wheel width	40 mm
Wheel body	Plastic
Offset	36 mm
Screw hole Ø	9 mm
Fastening	Screw-on plate
Packaging quantity	1

Rolling resistance	●●●●●
Wear resistance	●●●●●
Floor preservation	●

Copyright 04.05.2026 **BS Rollen GmbH** www.bs-rollen.com

Illustrations, drawings, dimensions etc. are subject to change and are therefore non-binding.