LS400.C10.125
Swivel castors
Transport castor

EAN 4021885076283



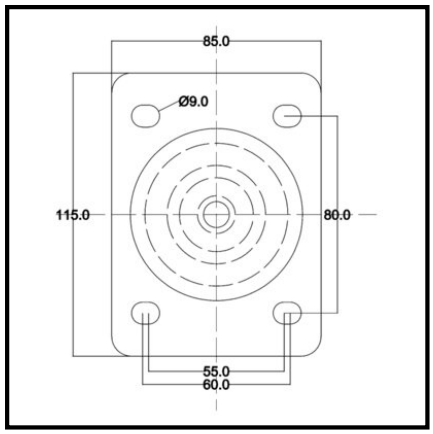

Technical data

Wheel Ø	125 mm
Load capacity	200 kg
Tread	Prothane® cast polyurethane 95 +/-3 Shore A
Mounting height	155 mm
Bearing	Ball bearing
Hole spacing distance	80x55/60 mm
Plate size	115x85 mm
Wheel width	30 mm
Wheel body	Cast iron
Offset	48 mm
Screw hole Ø	11 mm
Fastening	Screw-on plate
Packaging quantity	1

Rolling resistance	●●●●●
Wear resistance	●●●●●
Floor preservation	●●

Copyright 10.03.2026 **BS Rollen GmbH** www.bs-rollen.com

Illustrations, drawings, dimensions etc. are subject to change and are therefore non-binding.