A310.A89.100
Fixed castors
Apparatus castor

EAN 4021885121013



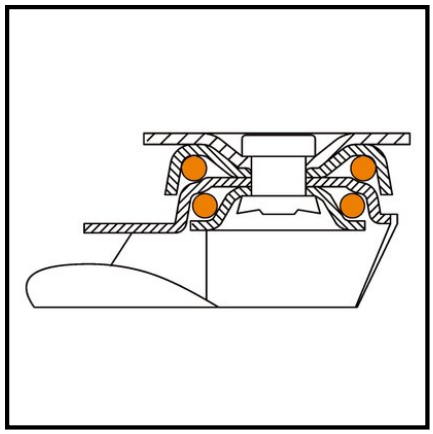

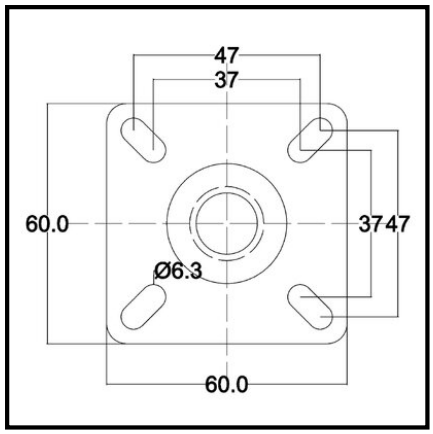

Technical data

Wheel Ø	100 mm
Load capacity	70 kg
Tread	Thermoplastic rubber grey, electrically conductive
Mounting height	124 mm
Bearing	Ball bearing
Hole spacing distance	47x47-37x37 mm
Plate size	60x60 mm
Wheel width	28 mm
Wheel body	Plastic
Screw hole Ø	6.3 mm
Fastening	Screw-on plate
Packaging quantity	1

Rolling resistance	●●●●●
Wear resistance	●●●●
Floor preservation	●●●

Copyright 03.11.2026 **BS Rollen GmbH** www.bs-rollen.com

Illustrations, drawings, dimensions etc. are subject to change and are therefore non-binding.