C330.A89.126
Swivel castors with directional lock
Plastic castor

EAN 4021885143466



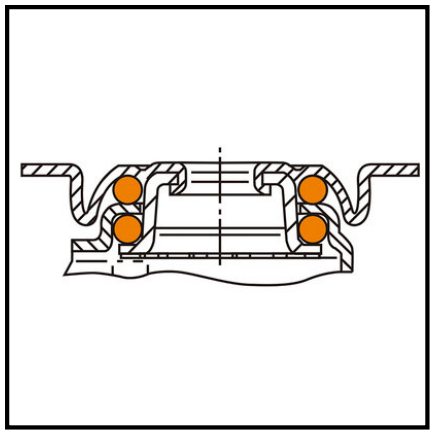

Technical data

Offset	38 mm
Wheel Ø	125 mm
Mounting height	161 mm
Tread	Thermoplastic rubber grey, electrically conductive
Wheel width	32 mm
Wheel body	Plastic
Screw hole Ø	8,5 mm
Load capacity	100 kg
Plate size	77x68 mm
Bearing	Ball bearing
Fastening	Screw-on plate
Hole spacing distance	61,5x51,5|56x46 mm
Packaging quantity	1

Rolling resistance	●●●●●
Floor preservation	●●●
Wear resistance	●●●●

Copyright 17.06.2026 **BS Rollen GmbH** www.bs-rollen.com

Illustrations, drawings, dimensions etc. are subject to change and are therefore non-binding.