E33.022
Ball transfer units
Ball transfer units

EAN 4021885060343



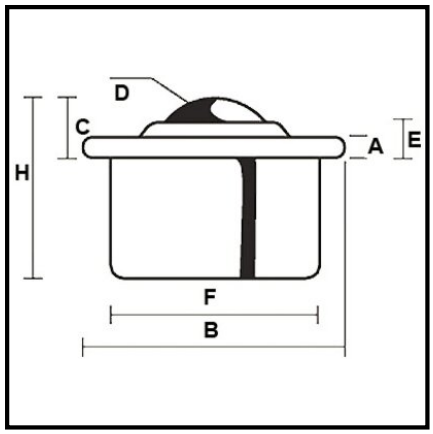

Technical data

Load capacity	97 kg
Material of the balls	Steel
Housing	Steel
D	22 mm
F	36 mm
B	45 mm
C	9.8 mm
H	30 mm
A	2.8 mm
E	5.5 mm
Packaging quantity	1

Copyright 23.04.2026 **BS Rollen GmbH** www.bs-rollen.com

Illustrations, drawings, dimensions etc. are subject to change and are therefore non-binding.