B121.A89.075
Swivel castors with brake
Dual apparatus castor

EAN 4021885112394



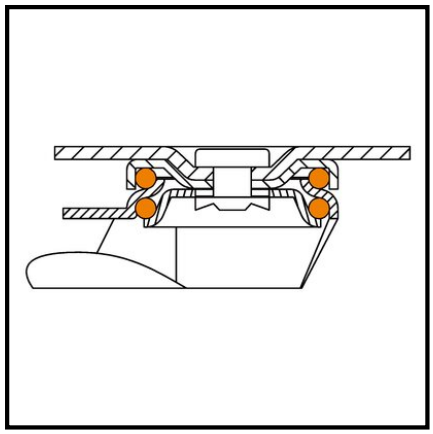

Technical data

Wheel Ø	75 mm
Tread	Thermoplastic rubber grey, electrically conductive
Mounting height	99 mm
Bearing	Ball bearing
Ø Backhole	10.2 mm
Wheel width	2x24 mm
Wheel body	Plastic
Offset	33 mm
Fastening	Bolt hole
Load capacity	100 kg
Packaging quantity	1

Rolling resistance	●●●●●
Wear resistance	●●●●
Floor preservation	●●●

Copyright 10.03.2026 **BS Rollen GmbH** www.bs-rollen.com

Illustrations, drawings, dimensions etc. are subject to change and are therefore non-binding.