A90.058
Wheels
Plastic wheel

EAN 4021885006389



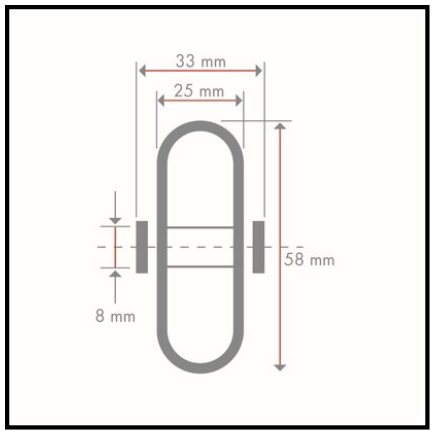

Technical data

Wheel Ø	58 mm
Load capacity	100 kg
Tread	Plastic white
Bearing	Plain bearing
Wheel width	25 mm
Hub length	33 mm
Wheel body	Plastic white
Ø axle hole / bore	8 mm
Material	PP
Packaging quantity	1

Rolling resistance	●●●●
Wear resistance	●●●●●
Floor preservation	●

Copyright 10.03.2026 **BS Rollen GmbH** www.bs-rollen.com

Illustrations, drawings, dimensions etc. are subject to change and are therefore non-binding.