L620.C10.250
Swivel castors with total brake
Heavy duty castor

EAN 4021885104702



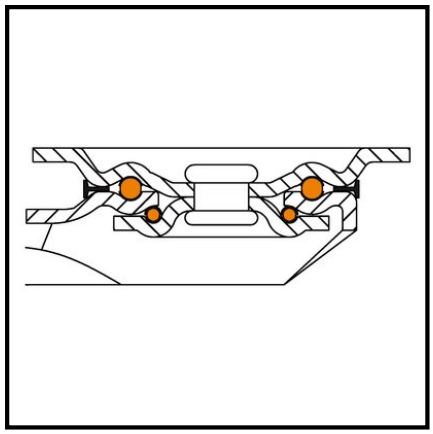

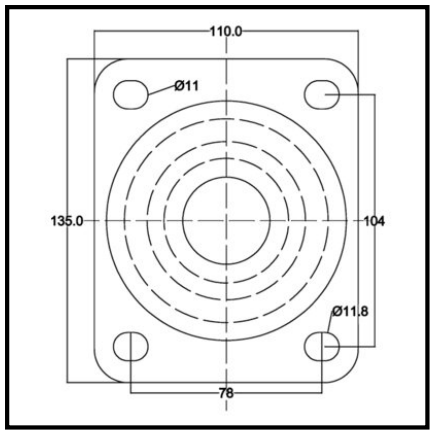

Technical data

Wheel Ø	250 mm
Tread	Prothane® cast polyurethane 95 +/-3 Shore A
Mounting height	290 mm
Bearing	Ball bearing
Hole spacing distance	104x78 mm
Plate size	135x110 mm
Wheel width	50 mm
Wheel body	Cast iron
Offset	58 mm
Screw hole Ø	11 mm
Fastening	Screw-on plate
Load capacity	1200 kg
Packaging quantity	1

Rolling resistance	●●●●●
Wear resistance	●●●●●
Floor preservation	●●

Copyright 10.03.2026 **BS Rollen GmbH** www.bs-rollen.com

Illustrations, drawings, dimensions etc. are subject to change and are therefore non-binding.