LS400.B80.125
Swivel castors
Transport castor

EAN 4021885096113



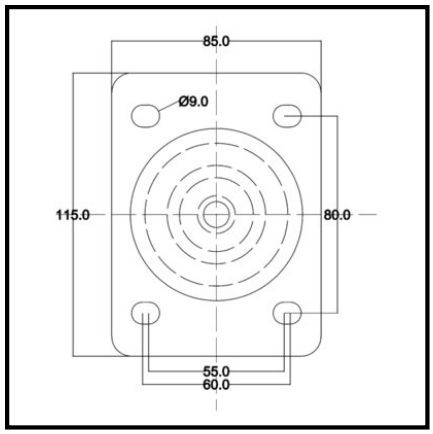

Technical data

Wheel Ø	125 mm
Load capacity	150 kg
Tread	Elastic rubber black
Mounting height	155 mm
Bearing	Ball bearing
Hole spacing distance	80x55/60 mm
Plate size	115x85 mm
Wheel width	40 mm
Wheel body	Aluminium
Offset	34 mm
Screw hole Ø	9 mm
Fastening	Screw-on plate
Packaging quantity	1

Rolling resistance	●●●●●
Wear resistance	●●●●
Floor preservation	●●●●●

Copyright 11.05.2026 **BS Rollen GmbH** www.bs-rollen.com

Illustrations, drawings, dimensions etc. are subject to change and are therefore non-binding.