B55.280
Wheels
Rubber wheel

EAN 4021885032654



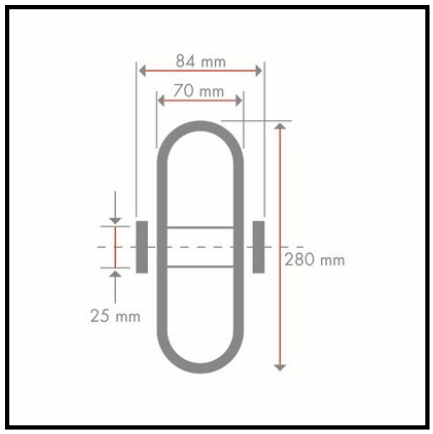

Technical data

Wheel Ø	280 mm
Load capacity	400 kg
Tread	Rubber black
Bearing	Roller bearing
Wheel width	70 mm
Hub length	84 mm
Wheel body	Zinc plated steel
Ø axle hole / bore	25 mm
Packaging quantity	1

Rolling resistance	●●●
Wear resistance	●●●
Floor preservation	●●●●

Copyright 10.03.2026 **BS Rollen GmbH** www.bs-rollen.com

Illustrations, drawings, dimensions etc. are subject to change and are therefore non-binding.