L420.B10.FUSS
Swivel castors with total brake
Construction fence castor

EAN 4021885122331



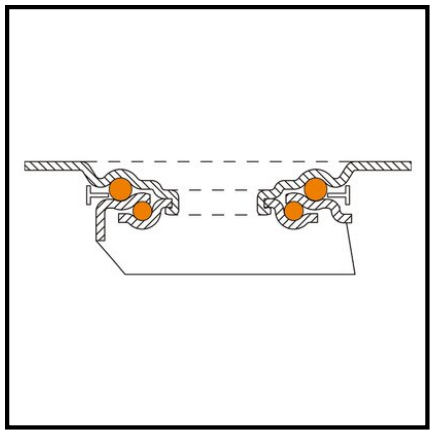

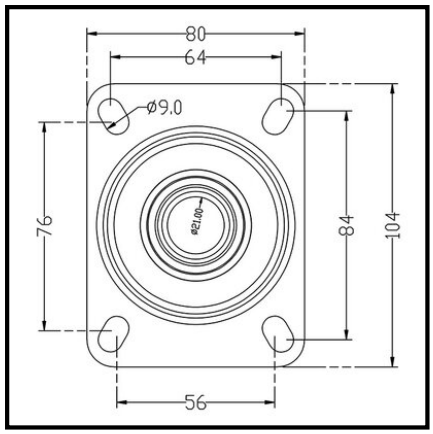

Technical data

Wheel Ø	125 mm
Load capacity	175 kg
Mounting height	155 mm
Bearing	Roller bearing
Hole spacing distance	84x64/76x56 mm
Plate size	105x80 mm
Wheel body	Plastic
Screw hole Ø	9 mm
Wheel width	35 mm
Offset	34 mm
Fastening	Screw-on plate
Tread	Plastic white
Packaging quantity	1

Rolling resistance	●●●●●
Wear resistance	●●●●●
Floor preservation	●

Copyright 10.03.2026 **BS Rollen GmbH** www.bs-rollen.com

Illustrations, drawings, dimensions etc. are subject to change and are therefore non-binding.