N120.B10.201
Swivel castors with total brake
Heavy duty castor

EAN 4021885002763



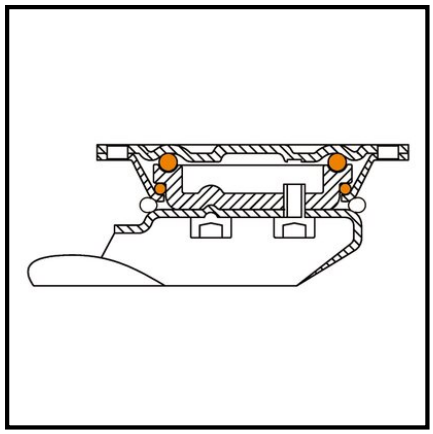

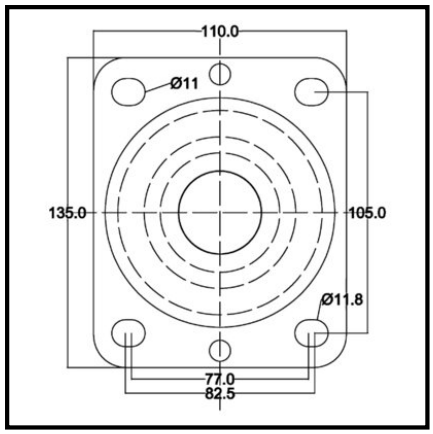

Technical data

Wheel Ø	200 mm
Load capacity	600 kg
Tread	Plastic
Mounting height	255 mm
Bearing	Roller bearing
Hole spacing distance	105x75 mm
Plate size	138x110 mm
Wheel width	50 mm
Wheel body	Plastic
Offset	52 mm
Screw hole Ø	11 mm
Fastening	Screw-on plate
Packaging quantity	1

Rolling resistance	●●●●●
Wear resistance	●●●●●
Floor preservation	●

Copyright 11.03.2026 **BS Rollen GmbH** www.bs-rollen.com

Illustrations, drawings, dimensions etc. are subject to change and are therefore non-binding.