L400.C90.230
Swivel castors
Transport castor

EAN 4021885013851



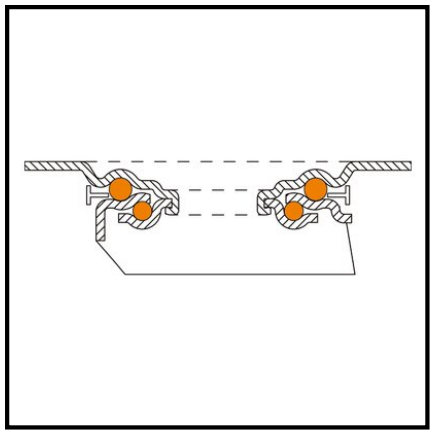

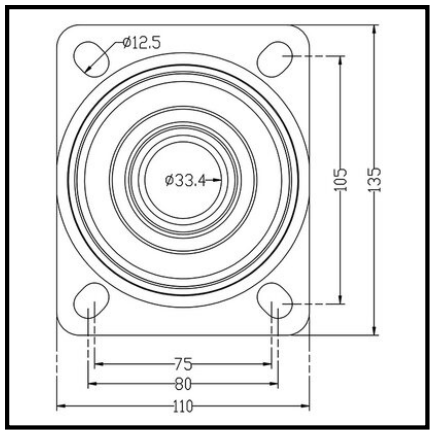

Technical data

Wheel Ø	230 mm
Load capacity	130 kg
Tread	Pneumatic tyre, black rubber
Mounting height	255 mm
Bearing	Roller bearing
Hole spacing distance	105x75 mm
Plate size	135x105 mm
Wheel width	65 mm
Wheel body	Steel rim
Offset	61 mm
Screw hole Ø	11 mm
Fastening	Screw-on plate
Packaging quantity	1

Rolling resistance	●●●
Wear resistance	●●●●
Floor preservation	●●●●●

Copyright 10.03.2026 **BS Rollen GmbH** www.bs-rollen.com

Illustrations, drawings, dimensions etc. are subject to change and are therefore non-binding.