L410.A85.102
Fixed castors
Transport castor

EAN 4021885120757

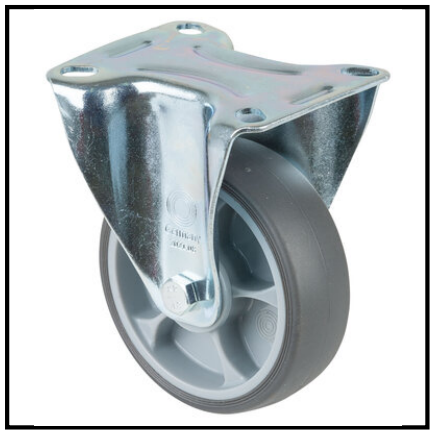

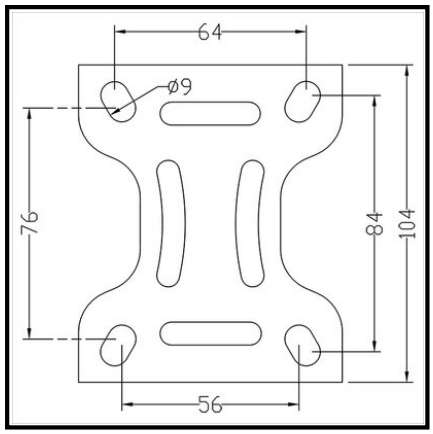

Technical data

Wheel Ø	100 mm
Load capacity	110 kg
Tread	Thermoplastic rubber grey
Mounting height	128 mm
Bearing	Ball bearing
Hole spacing distance	84x64/76x56 mm
Plate size	104x80 mm
Wheel width	32 mm
Wheel body	Plastic
Screw hole Ø	9 mm
Fastening	Screw-on plate
Packaging quantity	1

Rolling resistance	●●●●●
Wear resistance	●●●●
Floor preservation	●●●

Copyright 03.11.2026 **BS Rollen GmbH** www.bs-rollen.com

Illustrations, drawings, dimensions etc. are subject to change and are therefore non-binding.