T120.C10.150
Spring mounted swivel castors with brake
Spring mounted heavy duty castor

EAN 4021885093204

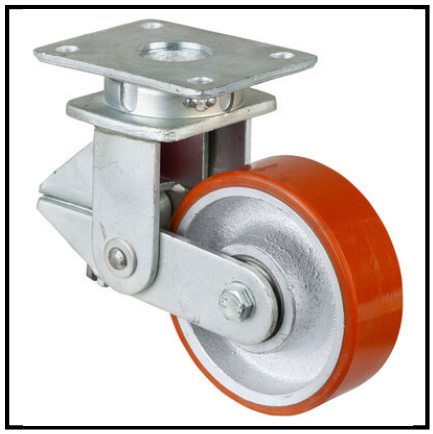

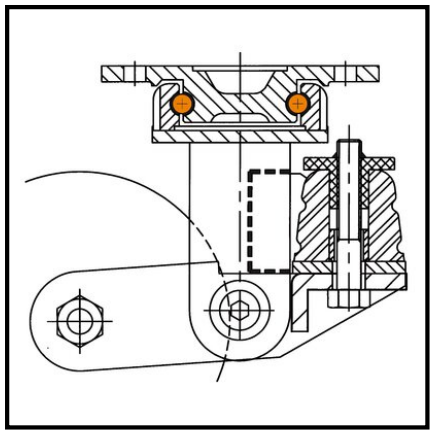

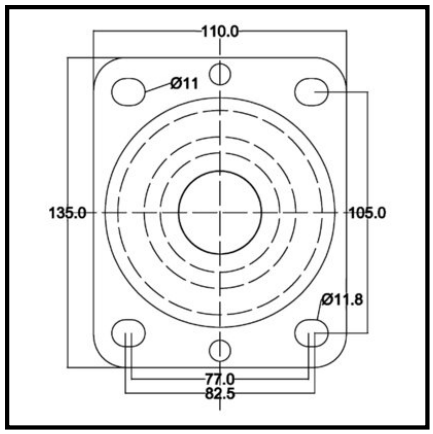

Technical data

Wheel Ø	150 mm
Load capacity	600 kg
Tread	Prothane® cast polyurethane 95 +/-3 Shore A
Bearing	Ball bearing
Hole spacing distance	105x75/80 mm
Plate size	138x110 mm
Wheel width	50 mm
Wheel body	Cast iron
Offset	80 mm
Mounting height without load	203 mm
Mounting height with full load	183 mm
Screw hole Ø	10 mm
Fastening	Screw-on plate
Packaging quantity	1

Rolling resistance	●●●●●
Wear resistance	●●●●●
Floor preservation	●●

Copyright 11.03.2026 **BS Rollen GmbH** www.bs-rollen.com

Illustrations, drawings, dimensions etc. are subject to change and are therefore non-binding.