B15.156
Wheels
Plastic wheel

EAN 4021885122393



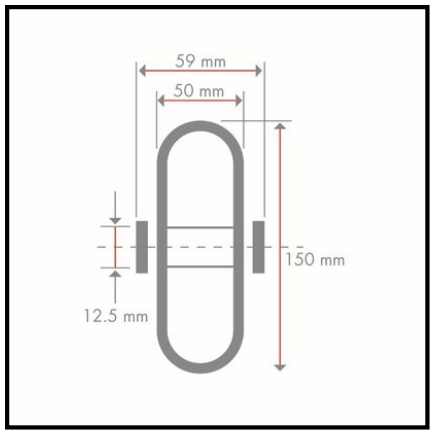

Technical data

Wheel Ø	150 mm
Load capacity	650 kg
Bearing	Ball bearing
Wheel width	50 mm
Hub length	59 mm
Ø axle hole / bore	12.5 mm
Material	PP
Tread	Plastic white
Wheel body	Plastic white
Packaging quantity	1

Rolling resistance	●●●●●
Wear resistance	●●●●●
Floor preservation	●

Copyright 10.03.2026 **BS Rollen GmbH** www.bs-rollen.com

Illustrations, drawings, dimensions etc. are subject to change and are therefore non-binding.