N110.B15.153
Fixed castors
Heavy duty castor

EAN 4021885122911



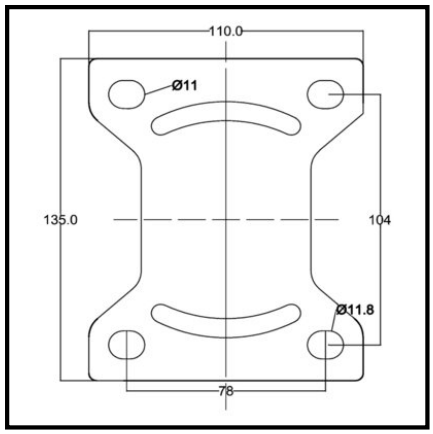

Technical data

Wheel Ø	150 mm
Load capacity	600 kg
Tread	Plastic
Mounting height	209 mm
Bearing	Ball bearing
Hole spacing distance	105x75 mm
Plate size	138x110 mm
Wheel width	50 mm
Wheel body	Plastic
Screw hole Ø	11 mm
Fastening	Screw-on plate
Packaging quantity	1

Rolling resistance	●●●●●
Wear resistance	●●●●●
Floor preservation	●

Copyright 03.11.2026 **BS Rollen GmbH** www.bs-rollen.com

Illustrations, drawings, dimensions etc. are subject to change and are therefore non-binding.