L610.B83.125
Fixed castors
Heavy duty castor

EAN 4021885117757



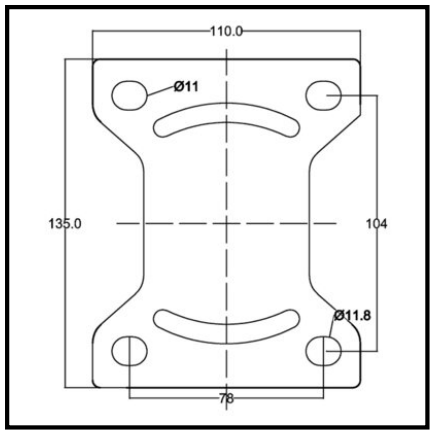

Technical data

Wheel Ø	125 mm
Load capacity	220 kg
Tread	Elastic rubber grey
Mounting height	178 mm
Bearing	Ball bearing
Hole spacing distance	104x78 mm
Plate size	135x110 mm
Wheel width	50 mm
Wheel body	Aluminium
Screw hole Ø	11 mm
Fastening	Screw-on plate
Packaging quantity	1

Rolling resistance	●●●●●
Wear resistance	●●●●
Floor preservation	●●●●●

Copyright 03.11.2026 **BS Rollen GmbH** www.bs-rollen.com

Illustrations, drawings, dimensions etc. are subject to change and are therefore non-binding.