L420.B22.150
Swivel castors with total brake
Transport castor

EAN 4021885151379



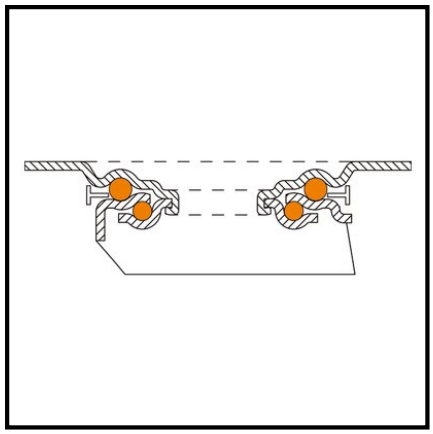

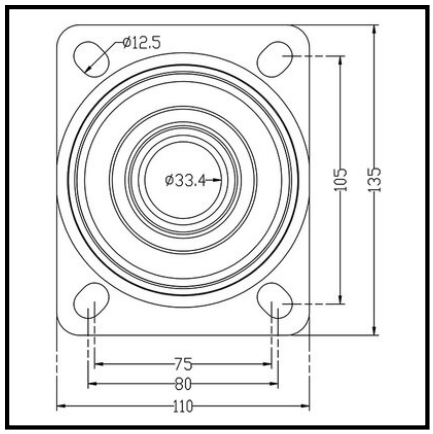

Technical data

Offset	53 mm
Wheel Ø	150 mm
Mounting height	190 mm
Tread	Polyamide glass-fibre reinforced, +280 °C
Wheel width	52 mm
Wheel body	Polyamide glass-fibre reinforced
Screw hole Ø	12 mm
Load capacity	300 kg
Plate size	135x110 mm
Bearing	Plain bearing
Fastening	Screw-on plate
Hole spacing distance	105x75|80 mm
Packaging quantity	1

Rolling resistance	●●●●
Floor preservation	●
Wear resistance	●●●●

Copyright 10.03.2026 **BS Rollen GmbH** www.bs-rollen.com

Illustrations, drawings, dimensions etc. are subject to change and are therefore non-binding.