L410.B80.200
Fixed castors
Transport castor

EAN 4021885096274



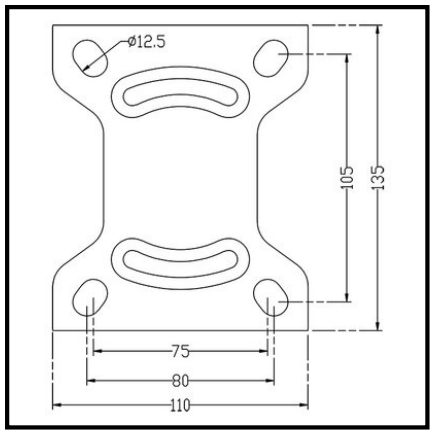

Technical data

Wheel Ø	200 mm
Load capacity	350 kg
Tread	Elastic rubber black
Mounting height	235 mm
Bearing	Ball bearing
Hole spacing distance	105x75/80 mm
Plate size	135x110 mm
Wheel width	50 mm
Wheel body	Aluminium
Screw hole Ø	11 mm
Fastening	Screw-on plate
Packaging quantity	1

Rolling resistance	●●●●●
Wear resistance	●●●●
Floor preservation	●●●●●

Copyright 03.11.2026 **BS Rollen GmbH** www.bs-rollen.com

Illustrations, drawings, dimensions etc. are subject to change and are therefore non-binding.