A65.048
Wheels
Sheet steel wheels

EAN 4021885005436



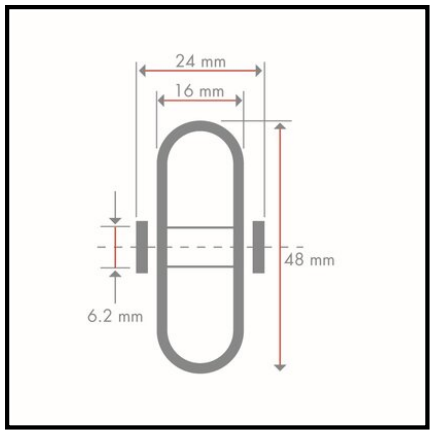

Technical data

Wheel Ø	48 mm
Load capacity	7.7 kg
Wheel width	16 mm
Hub length	24 mm
Ø axle hole / bore	6.2 mm
Packaging quantity	1

Copyright 10.03.2026 **BS Rollen GmbH** www.bs-rollen.com

Illustrations, drawings, dimensions etc. are subject to change and are therefore non-binding.