281
conveyor rollers
Blank steel cylinder Conveyor rollers

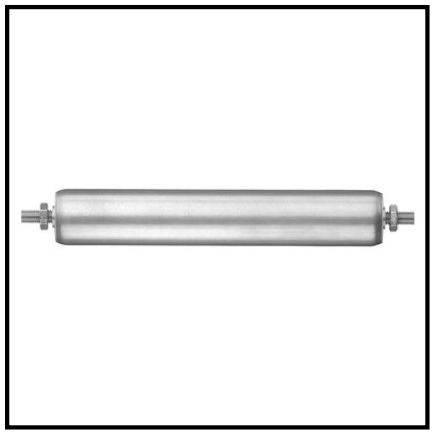

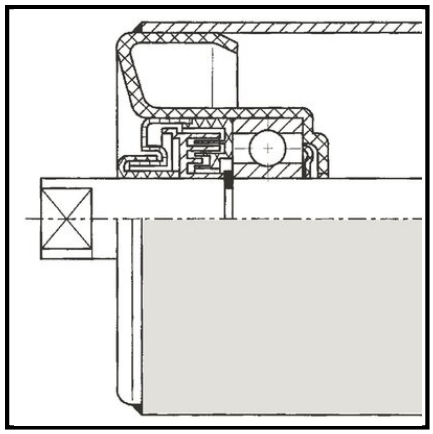

Technical data

Tube-Outer Ø	89x3,25 mm
Packaging quantity	1

Copyright 10.03.2026 **BS Rollen GmbH** www.bs-rollen.com

Illustrations, drawings, dimensions etc. are subject to change and are therefore non-binding.