E36.030
Ball transfer units
Ball transfer units

EAN 4021885060428



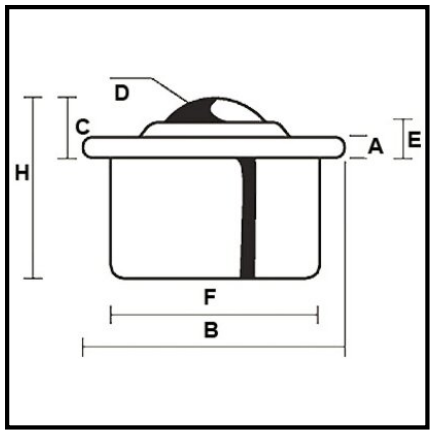

Technical data

Load capacity	15 kg
Material of the balls	Plastic
Housing	Galvanised steel
D	30 mm
F	45 mm
B	55 mm
C	13.8 mm
H	37 mm
A	4 mm
E	8.3 mm
Packaging quantity	1

Copyright 23.04.2026 **BS Rollen GmbH** www.bs-rollen.com

Illustrations, drawings, dimensions etc. are subject to change and are therefore non-binding.