# E34.022
# Ball transfer units
# Ball transfer units

## EAN 4021885060381



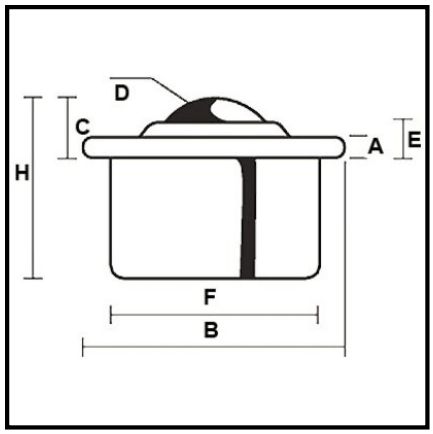


## Technical data

| | |
|---|---|
| **Load capacity** | 97 kg |
| **Material of the balls** | Steel |
| **Housing** | Steel |
| **D** | 22 mm |
| **F** | 36 mm |
| **B** | 45 mm |
| **C** | 9.8 mm |
| **H** | 30 mm |
| **A** | 2.8 mm |
| **E** | 5.5 mm |
| **Packaging quantity** | 1 |

Copyright 23.04.2026 **BS Rollen GmbH** www.bs-rollen.com

Illustrations, drawings, dimensions etc. are subject to change and are therefore non-binding.